150 X 120 X 30 CM
59.1" x 47.2" x 11.8"
MADERCLICK MEGAPLUS 4/300

5 Años Garantía
Years Guarantee
Jahre Garantie
Ans Garantie
Anos de Garantia
SIMONRACK

MONTAJE · ASSEMBLY · AUFBAU · MONTAGE
9 min

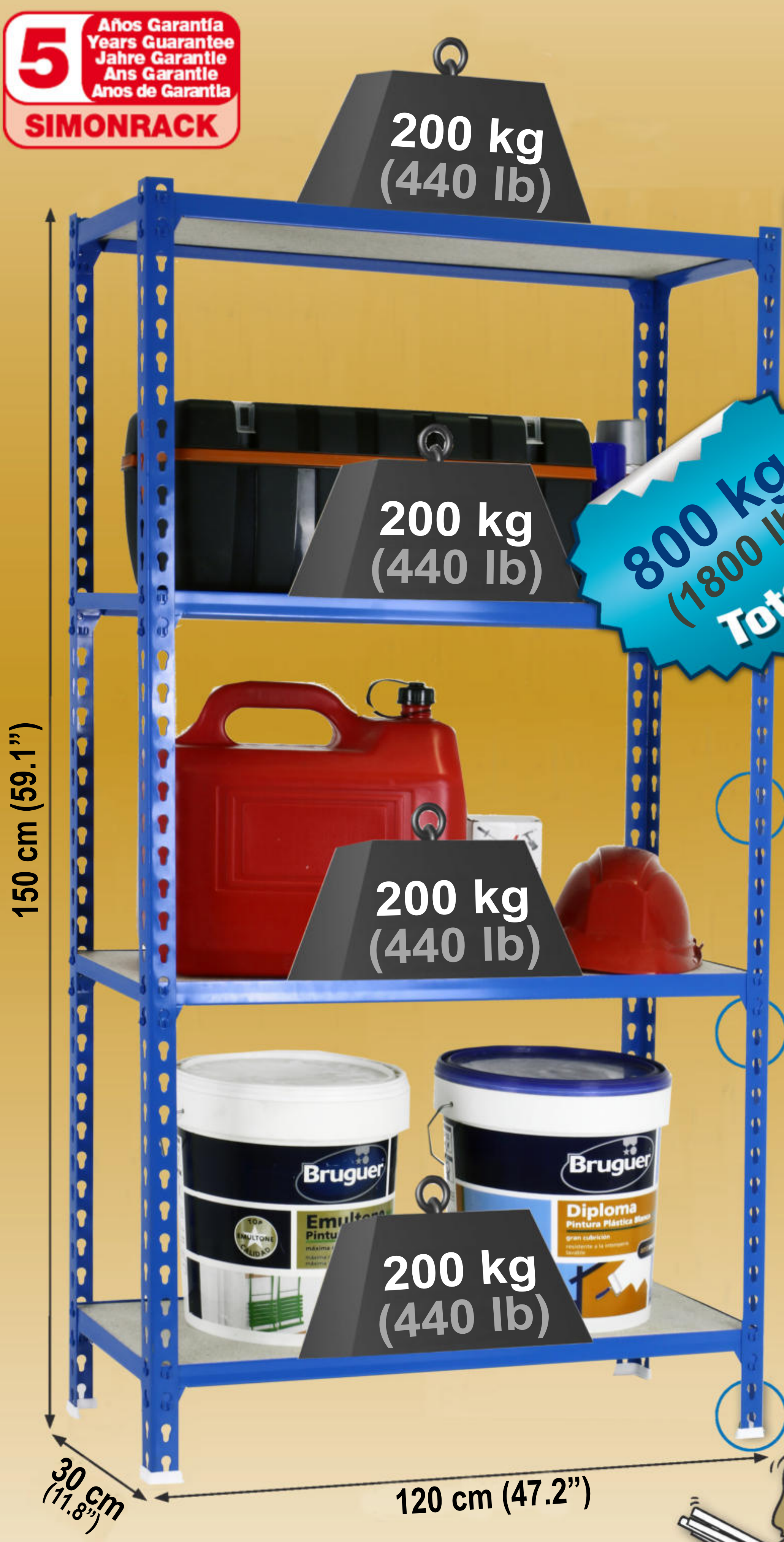
200 kg
(440 lb)
200 kg
(440 lb)
200 kg
(440 lb)
200 kg
(440 lb)
150 cm (59.1")
30 cm
(11.8")
120 cm (47.2")
Bruguer
Bruguer
Diploma

800 kg (1800 lb) Total

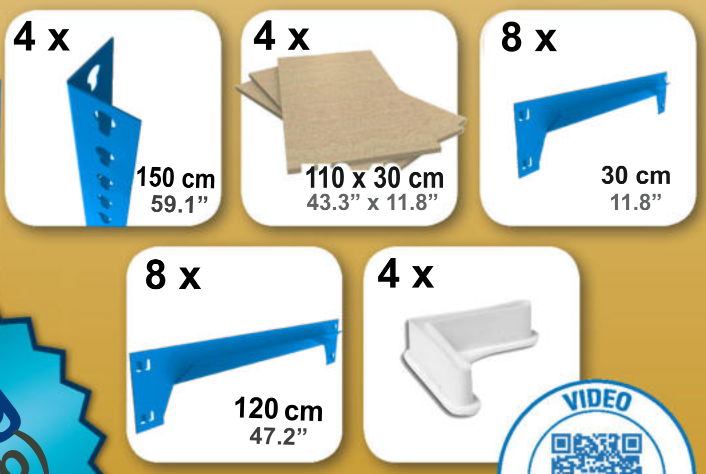
4 x
150 cm
59.1"
4 x
110 x 30 cm
43.3" x 11.8"
8 x
30 cm
11.8"
8 x
120 cm
47.2"
4 x

VIDEO INSTRUCTIONS

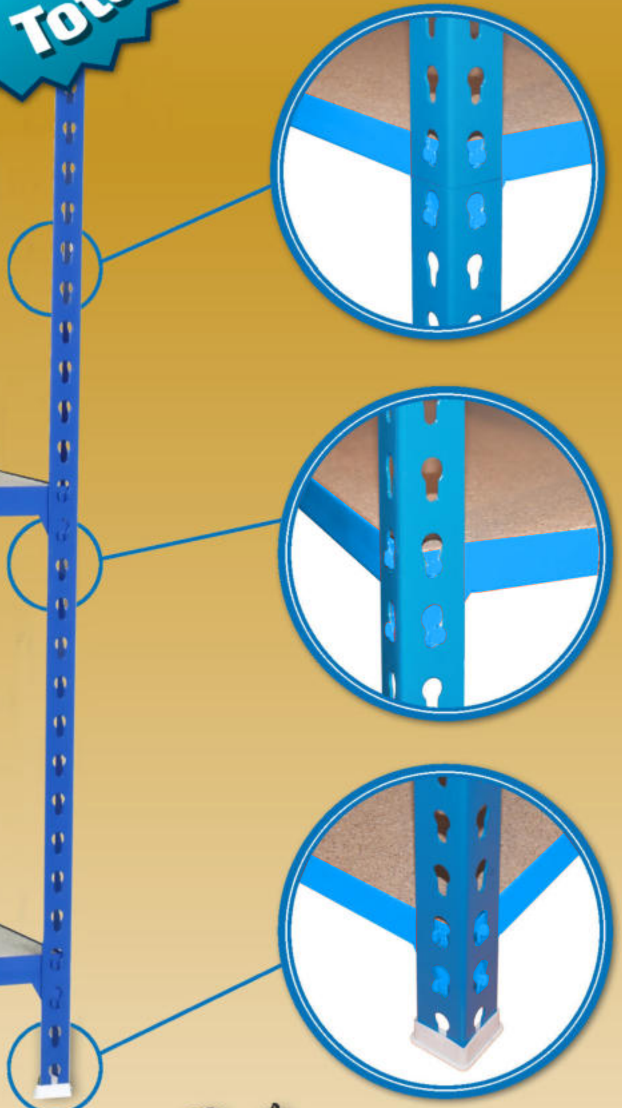

CE
CERTIFICATE OF CONFORMITY

OPTION

8 425437 077319

ESTANTERIAS SIMON S.L. B.50.556.463
PG. ALFAMEN C/ POLIGONO C, Nº3
ALFAMEN (ZARAGOZA)

Simon Rack
SINCE 1964 MANUFACTURER

www.simonrack.com

www.simonrack.com

MADE IN SPAIN
European Quality

EPOXY POLIESTER

EMPRESA CERTIFICADA
EN SISTEMA DE GESTIÓN DE CALIDAD
ISO 9001:2015

INSTRUCTIONS

Simon Rack
SINCE 1964 - MANUFACTURER

1

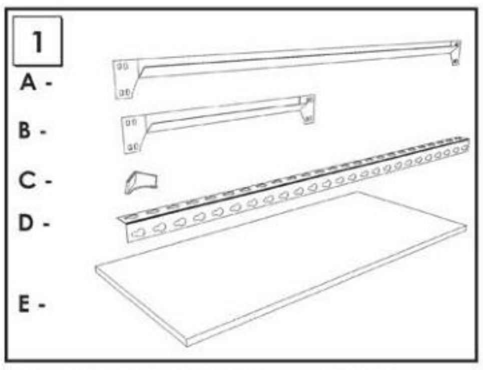

2

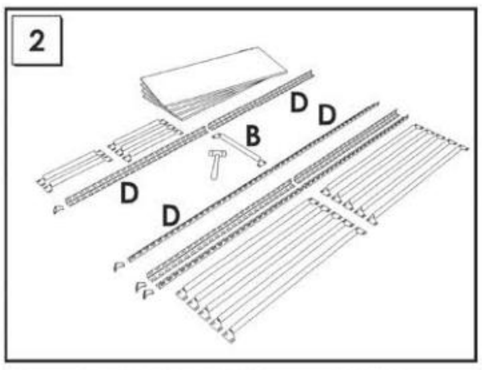

3

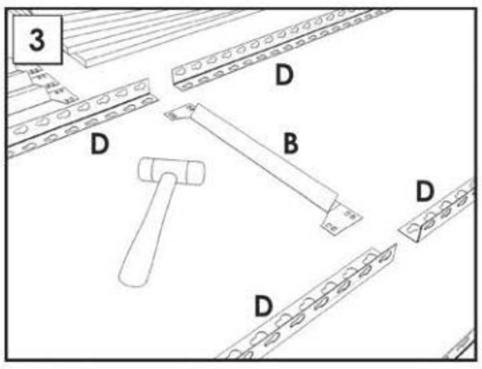

4

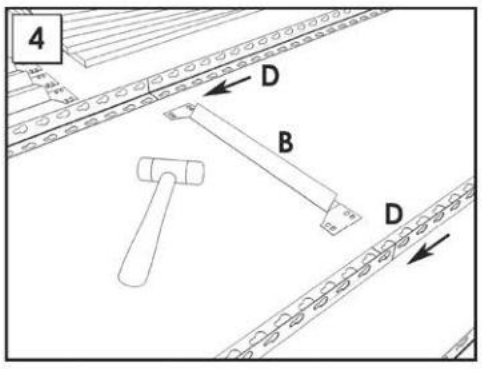

5

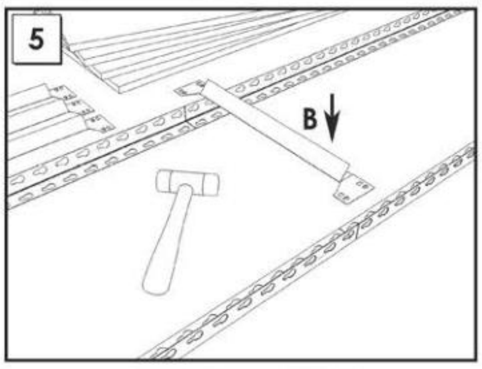

6

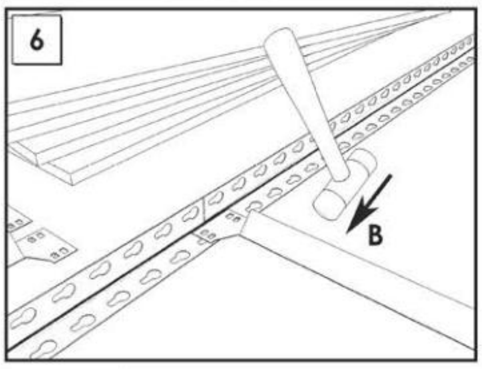

7

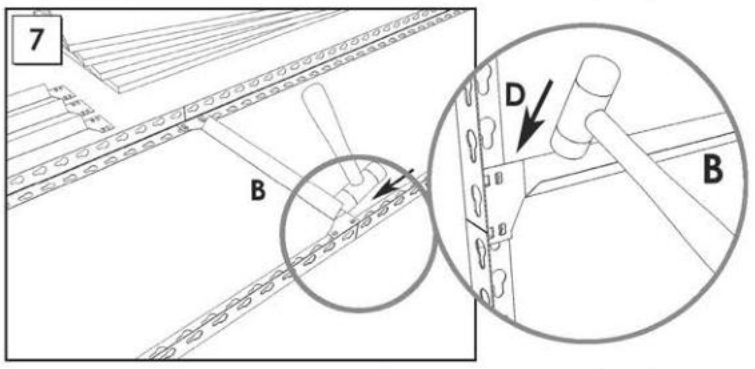

8

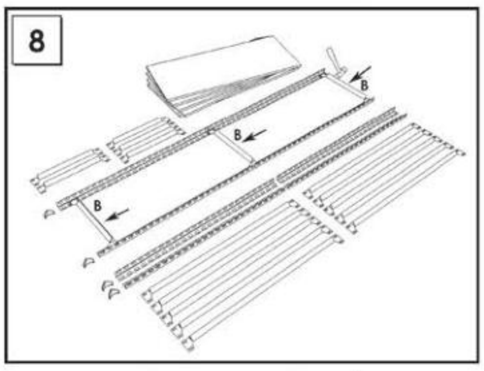

9

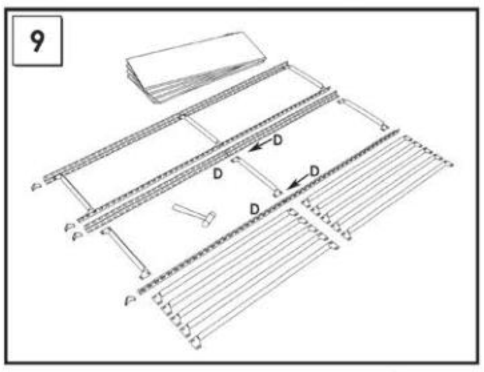

10

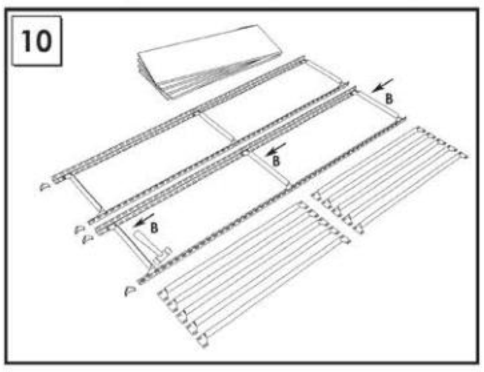

11

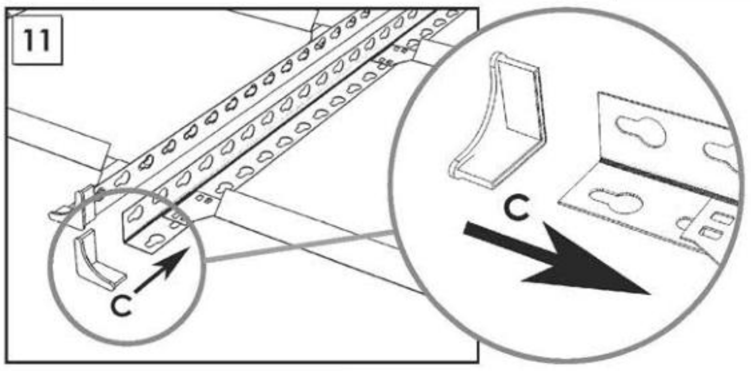

12

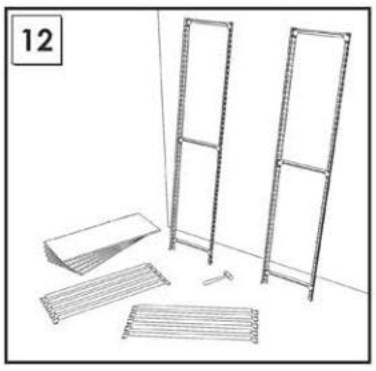

13

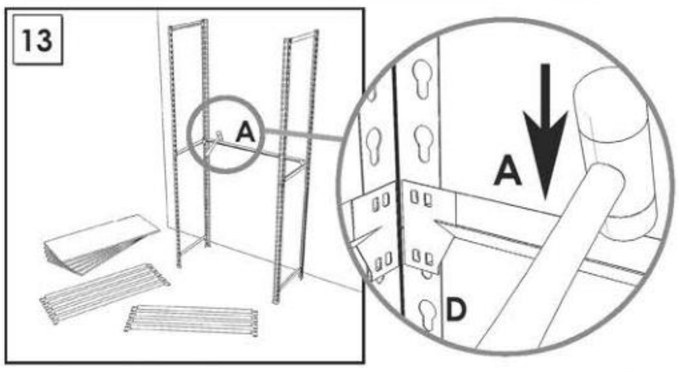

14

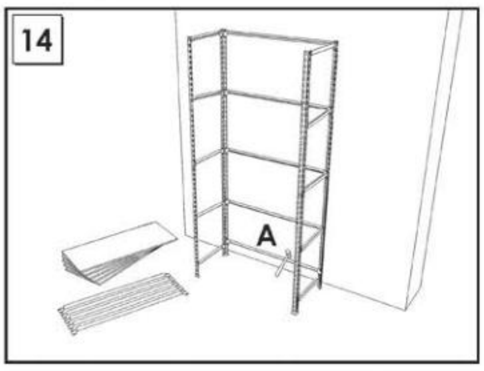

15

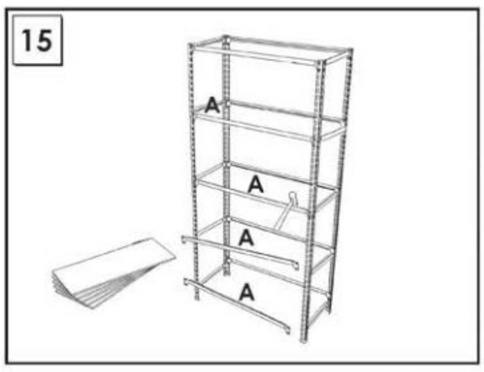

16

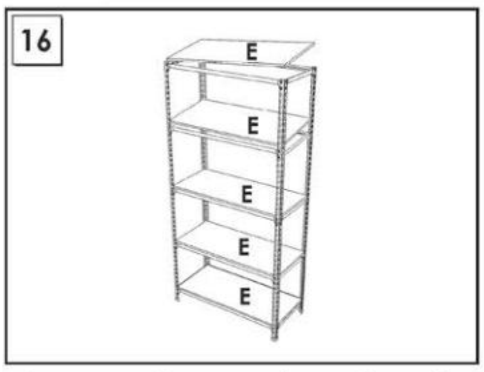

On-line instructions: **www.instructionsrack.com/maderclick**

www.simonrack.com • www.simonrack.com • www.simonrack.com • www.simonrack.com • www.simonrack.com • www.simonrack.com • www.simonrack.com • www.simonrack.com • www.simonrack.com • www.simonrack.com • www.simonrack.com

SIMONCLASSIC

BOLTS SYSTEM
Up to:
150 Kg (331 lb)
Kg/Shelf
Uniformly Distributed Load

SIMONCLICK

NO BOLTS SYSTEM
Up to:
400 Kg (882 lb)
Kg/Shelf
Uniformly Distributed Load

SIMONOFFICE

NO BOLTS SYSTEM
Up to:
275 Kg (606 lb)
Kg/Shelf
Uniformly Distributed Load

SIMONTALLER

NO BOLTS SYSTEM
Up to:
700 Kg (1543 lb)
Kg/Shelf
Uniformly Distributed Load

BANCOS DE TRABAJO
WORK BENCHES

Up to:
800 Kg (1764 lb)
Kg/Shelf
Uniformly Distributed Load

SIMONHOME

Up to:
150 Kg (331 lb)
Kg/Shelf
Uniformly Distributed Load

TAQUILLAS
LOCKER

SIMONTITÁN

NO BOLTS SYSTEM
Up to:
900 Kg (1984 lb)
Kg/Shelf
Uniformly Distributed Load

SIMONINOX

NO BOLTS SYSTEM

SIMONPALET

Up to:
4500 Kg (9921 lb)
Kg/Shelf
Uniformly Distributed Load

SIMONLEVER

ALTILLOS Y PASILLOS ELEVADOS
PLATFORMS AND MEZZANINES